Mobile-Pack-Bin MPB 918-SN

with self-cleaning BERGMANN system. No regular cleaning under and behind the piston required, equipped for roll-on roll-off vehicles, particularly suitable for <u>wet waste and problematic waste.</u>

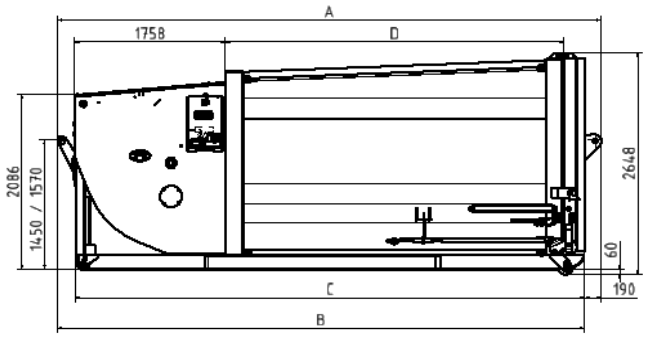

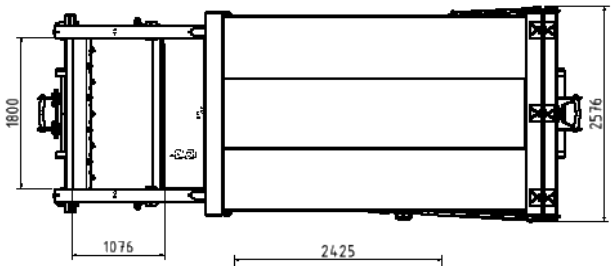

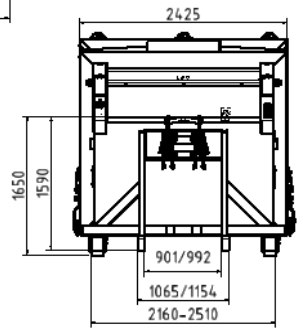

<u>Technical Details:</u>

* Integrated hydraulic unit that can be pulled out to the side
* compaction system: self-cleaning pendulum piston
* Continuously loadable - in each press piston position there is always a constant large filling volume available
* no blocking during the press stroke
* Press section and container space are welded in one piece from the filling edge to the backdoor
* The pendulum flap is locked twice.
* The special design of the container guarantee an easy empty

<u>Standard equipment of machine:</u>

* fold down front hook, hook height can be adjusted to 1.450 mm or 1.570 mm
* manoevring hook at rear welded on a height of 1.570mm
* pendulum discharge door, secure galvanized double locking device
* plastic rollers in front and at rear
* conical container
* single pump
* oil deficiency switch
* from outside greasable cylinder ginger
* electrical connection via 32A-CEE-plug (16A-CEE-plug or additional phase inverter optional)
* automatic switch off after running time
* lockable lateral control panel on the right side (remote control optional)
* two-component coating (80 µm) in RAL colour as requested

Stand: 17.06.2020 **Index: 000** **All indicated dimensions are approximate dimensions! Subject to technical modifications!**

Power:	5,5 kW
Fuse protection	C 25A
Electrical connection:	400V, 50Hz, clockwise
Forward / return cycle speed:	35 s. / 36 s.
Displaced volume:	0,75 m³
Capacity charge box:	2,5 m³

Type:	capacity [m³]	maximum operating pressure [bar]	theoretical cylinder thrust [kN]	theoretical blade face pressure [N / cm²]	net weight [kg]	" A " [mm]	" B " [mm]	" C " [mm]	" D " [mm]
MPB 1620 - SN / 14									
MPB 1620 - SN / 18									
MPB 1620 - SN / 20	19,4	250	393	39,0	4.675	6.350	6.190	5.940	4.000